SPENCER Systems | FAGOR

STACKED TUMBLE DRYERS

Fagor SR-2

Stack dryers · TP2 control

Two independent dryers in one footprint, from 2 × 10.5 to 2 × 21.9 kg, in electric or gas heating. Built for laundromats and busy on-premise laundries. Supplied, installed and serviced across Australia by Spencer Systems.

2 × 10.5–21.9
KG LOAD PER DRUM AT 1:20

785 mm
WIDE (870 MM FOR SR-2-22)

2 heat sources
ELECTRIC OR GAS

7" touch
TP2 · FAGORKONNECT

SR-2-11 | SR-2-14 | SR-2-18 | SR-2-22

Installed and serviced by the people who sell it · 1300 70 69 70 · spencersystems.com.au
Images and data courtesy of Fagor Professional.



SR-2 stack dryer
Two drums, one footprint

STANDARD ON EVERY MODEL

- 7" programmable TP2 touch screen, 37 languages
- USB and FagorKonnect: programming, telemetry, remote payment
- Stainless steel drums with recessed SOFT TOUCH perforations
- Frequency inverter with reversing drum action
- MIXED FLOW axial-radial airflow and large debris filter drawer
- COOL DOWN at end of cycle
- Door hinges open 180°
- OPL dryer convertible to self-service

OPTIONS

iDRY humidity control with drum inlet temperature control · double glazed door · FIRE KARE fire protection · opposing door opening · tropicalised model · perfume dosing · stainless cabinet and front panel · rear external air inlet with filter · 0.3 mm debris filter mesh · wooden packaging

TECHNICAL SPECIFICATIONS · GENERAL

Per-drum figures unless stated. SR-2-22 is gas heated only.

SPECIFICATION	Unit	SR-2-11 2 × 10.5 kg	SR-2-14 2 × 13.5 kg	SR-2-18 2 × 16.5 kg MOST POPULAR	SR-2-22 2 × 21.9 kg MOST POPULAR
CAPACITY · PER DRUM					
Load at 1:18	kg	11.7 × 2	15 × 2	18.3 × 2	24.3 × 2
Load at 1:20	kg	10.5 × 2	13.5 × 2	16.5 × 2	21.9 × 2
DRUM · EACH					
Drum diameter	mm	750	750	750	835
Drum length	mm	475	610	746	800
Drum volume	L	210	270	330	440
DOOR					
Door opening diameter	mm	574	574	574	575
Floor to door centre (lower / upper)	mm	547 / 1522	547 / 1522	547 / 1522	574 / 1618
Floor to bottom of door (lower / upper)	mm	189 / 1164	189 / 1164	189 / 1164	214 / 1258
DRIVE AND AIRFLOW					
Drum motor	kW	0.37 × 2	0.37 × 2	0.37 × 2	0.37 × 2
Fan motor	kW	0.25 × 2	0.25 × 2	0.25 × 2	0.55 × 2
Nominal airflow	m^3/h	500 × 2	500 × 2	500 × 2	900 × 2
Exhaust outlet diameter	mm	200 × 2	200 × 2	200 × 2	250
Sound level	dB	64	64	64	69
HEAT DISSIPATION TO ROOM					
Total, maximum	kW	3.3	3.3	3.3	5
Front panel, maximum	kW	1.2	1.2	1.2	1.9

HEATING, ELECTRICAL SUPPLY AND SHIPPING

Figures for the whole stack (both drums) unless shown × 2.

SPECIFICATION	Unit	SR-2-11 2 × 10.5 kg	SR-2-14 2 × 13.5 kg	SR-2-18 2 × 16.5 kg MOST POPULAR	SR-2-22 2 × 21.9 kg MOST POPULAR
ELECTRIC HEATED					
Heating power	kW	12 × 2	18 × 2	18 × 2	–
Total installed power	kW	25.34	37.34	37.34	–
Evaporation capacity	L/h	27	29	31	–
Hourly output (dry linen)	kg/h	54	58	62	–
GAS HEATED					
Heating power	kW	20.5 × 2	20.5 × 2	20.5 × 2	30.4 × 2
Installed electrical power	kW	1.34	1.34	1.34	1.94
Natural gas consumption	MJ/h	158	158	158	238
LPG consumption	MJ/h	158	158	158	238
Evaporation capacity	L/h	30.8	31.4	32	44
Hourly output (dry linen)	kg/h	61.6	62.8	64	88
Gas inlet (BSPP)	inch	¾"	¾"	¾"	¾"
ELECTRICAL SUPPLY · ELECTRIC HEATED					
230 V single phase	cable / A	–	–	–	Gas only
400 V three phase	cable / A	5×16 / 50 A	5×16 / 63 A	5×16 / 63 A	Gas only
ELECTRICAL SUPPLY · GAS HEATED					
230 V single phase	cable / A	3×2.5 / 16 A	3×2.5 / 16 A	3×2.5 / 16 A	3×2.5 / 20 A
400 V three phase	cable / A	3×2.5 / 16 A ¶	3×2.5 / 16 A ¶	3×2.5 / 16 A ¶	3×2.5 / 20 A ¶
SIZE AND SHIPPING · NET / GROSS (PACKED)					
Width	mm	785 / 865	785 / 865	785 / 865	870 / 950
Depth	mm	1001 / 1084	1135 / 1218	1271 / 1354	1312 / 1395
Height	mm	1980 / 2126	1980 / 2126	1980 / 2126	2118 / 2250
Weight	kg	284 / 295	299 / 312	329 / 329	374 / 389

– = not offered on the manufacturer's sheet. Gas consumption in MJ/h for the whole stack, from Fagor's Australia / NZ gas tables. ¶ On 400 V, gas models connect phase, neutral and earth. Evaporation and output at full 1:20 load of towels, 90 °C. Electrical ratings are Fagor's; final cable sizing to AS/NZS 3000 and 3008 by the installing electrician.

Fagor SR stack dryers

MAIN DIMENSIONS · ALL DIMENSIONS IN MILLIMETRES

GENERAL ARRANGEMENT · SR-2-11 / 14 / 18

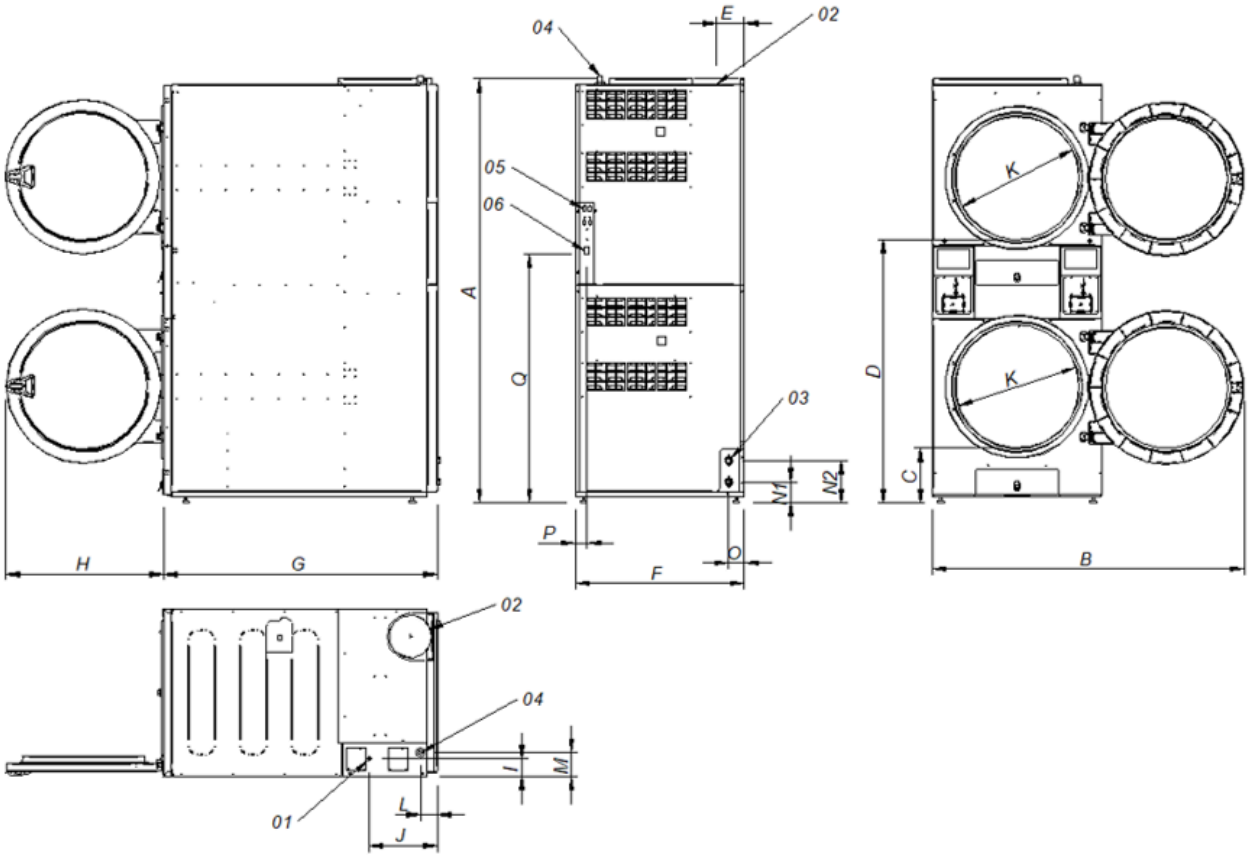

CONNECTIONS

1. Electrical connection
2. Exhaust outlets 2 × Ø200
3. Two fire / sprinkler valves ¾"
4. Gas inlet ¾"
5. Ethernet connection
6. On / off control switch

Model	A	B	C	D	E	F	G	H	I	J	K	L	M	N1	N2	O	P	Q
SR-2-11	1994	1447	259	1234	131	785	1001	735	83	318	575	77	113	97	197	73	54	1163
SR-2-14	1994	1447	259	1234	131	785	1135	735	83	318	575	77	113	97	197	73	54	1163
SR-2-18	1990	1447	259	1234	131	785	1271	735	83	318	575	77	113	97	197	73	54	1163

Letters refer to the drawing above.

Fagor SR stack dryers

MAIN DIMENSIONS · ALL DIMENSIONS IN MILLIMETRES

GENERAL ARRANGEMENT · SR-2-22

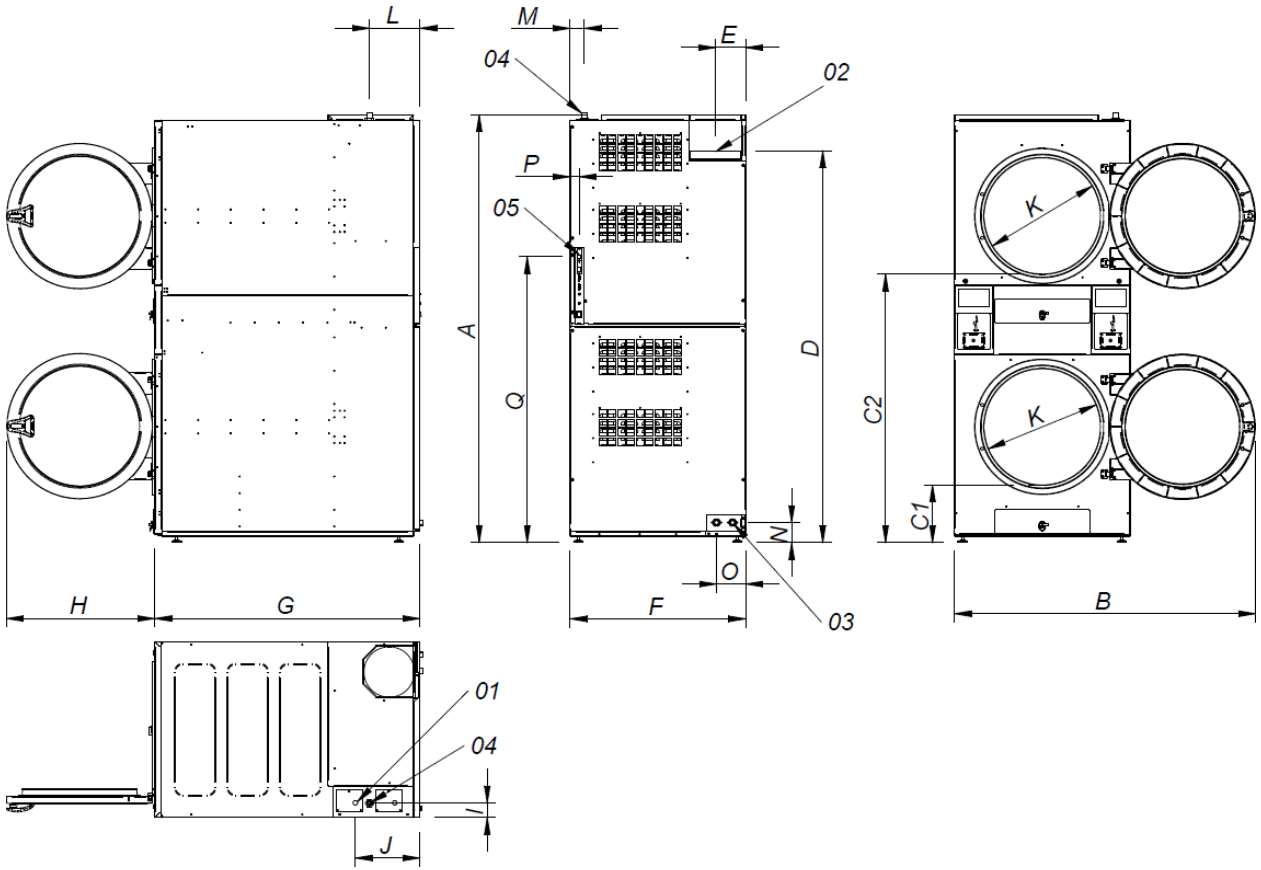

CONNECTIONS

1. Electrical connection
2. Exhaust outlet Ø250
3. Two fire valves ¾"
4. Gas inlet ¾"
5. Ethernet connection

Model	A	B	C1	C2	D	E	F	G	H	I	J	K	L	M	N	O	P	Q
SR-2-22	2118	1490	286	1330	1940	149	870	1312	735	73	320	575	250	70	100	145	45	1416

Letters refer to the drawing above.