SPENCER Systems | FAGOR

COMMERCIAL TUMBLE DRYERS

Fagor SR

Single pocket · TP2 control

Single-pocket dryers from 10.5 to 75 kg in electric, gas or steam heating, for on-premise laundries and laundromats. Supplied, installed and serviced across Australia by Spencer Systems.

10.5–75 kg
LOAD CAPACITY AT 1:20

3 heat sources
ELECTRIC, GAS OR STEAM

Reversing
FREQUENCY INVERTER STANDARD

7" touch
TP2 · FAGORKONNECT

SR-11 | SR-14 | SR-18 | SR-22 | SR-28 | SR-35 | SR-45 | SR-60 | SR-80



SR-11 to SR-35
OPL or self-service



SR-45 to SR-80
High capacity · geared drive

STANDARD ON EVERY MODEL

- 7" programmable TP2 touch screen, 37 languages
- USB and FagorKonnect: programming, telemetry, remote payment
- Stainless steel drum with recessed SOFT TOUCH perforations
- Frequency inverter with reversing drum action
- MIXED FLOW axial-radial airflow and large debris filter drawer
- COOL DOWN at end of cycle
- Door hinges open 180°, reversible door
- OPL dryer convertible to self-service

OPTIONS

Humidity control · double glazed door · FIRE KARE fire protection · tropicalised model · perfume dosing · rear external air inlet with filter · 0.6 or 1.2 mm debris filter mesh · stainless cabinet and front panel · stainless or low pressure steam coil · reduced 12 kW heating on SR-14 · automatic or manual sliding door and front tipping kit (SR-45 to SR-80) · thermal oil heating (SR-45 to SR-80) · wooden packaging

Installed and serviced by the people who sell it · 1300 70 69 70 · spencersystems.com.au
Images and data courtesy of Fagor Professional.

TECHNICAL SPECIFICATIONS · GENERAL AND SHIPPING

Load capacity shown under each model at 1:20.

SPECIFICATION	Unit	SR-11 10.5 kg	SR-14 13.5 kg	SR-18 16.5 kg	SR-22 22 kg MOST POPULAR	SR-28 27.5 kg	SR-35 33 kg MOST POPULAR	SR-45 45 kg	SR-60 60 kg MOST POPULAR	SR-80 75 kg MOST POPULAR
CAPACITY										
Load at 1:18	kg	11.7	15	18.3	24.3	30.6	36.7	50	66.7	83.3
Load at 1:20	kg	10.5	13.5	16.5	22	27.5	33	45	60	75
DRUM										
Drum diameter	mm	750	750	750	835	947	947	1225	1225	1225
Drum length	mm	475	610	746	800	780	936	760	1020	1252
Drum volume	L	210	270	330	440	550	660	900	1200	1500
DOOR										
Door opening diameter	mm	574	574	574	574	802	802	802	802	802
Floor to door centre	mm	976	976	976	1030	1040	1040	1275	1275	1275
Floor to bottom of door	mm	618	618	618	672	578	578	813	813	813
DRIVE AND AIRFLOW										
Drum motor	kW	0.37	0.37	0.37	0.37	0.55	0.55	0.75	1.1	1.5
Fan motor	kW	0.25	0.25	0.25	0.55	0.55	0.55	1.1	1.1	1.1
Nominal airflow	m^3/h	850	850	850	1200	1200	1200	3000	3000	3000
Exhaust outlet diameter	mm	200	200	200	200	200	200	300	300	300
Sound level	dB	64	64	64	65	65	65	67	67	67
HEAT DISSIPATION TO ROOM										
Total, maximum	kW	1.2	1.8	1.8	2.4	3	3.6	4.9	6.5	6.5
Front panel, maximum	kW	0.8	1.3	1.3	1.7	2.1	2.5	2.2	2.9	2.9
SIZE AND SHIPPING · NET / GROSS (PACKED)										
Width	mm	785 / 865	785 / 865	785 / 865	890 / 970	985 / 1065	985 / 1065	1270 / 1330	1270 / 1330	1270 / 1330
Depth	mm	855 / 940	989 / 1074	1125 / 1210	1255 / 1345	1054 / 1154	1210 / 1310	1106 / 1185	1366 / 1455	1598 / 1705
Height	mm	1694 / 1840	1694 / 1840	1694 / 1840	1812 / 1940	1975 / 2080	1975 / 2080	2380 / 2200 ‡	2380 / 2200 ‡	2380 / 2200 ‡
Weight	kg	172 / 180	180 / 190	187 / 200	210 / 230	230 / 260	260 / 285	395 / 430	529 / 575	657 / 715

‡ SR-45 / 60 / 80: Fagor's sheet gives net height 2380 mm and packed height 2200 mm; confirm with us before planning access.

HEATING AND ELECTRICAL SUPPLY

Output is kg of dry linen per hour. Cable given as cores × mm² / device rating.

SPECIFICATION	Unit	SR-11 10.5 kg	SR-14 13.5 kg	SR-18 16.5 kg	SR-22 22 kg MOST POPULAR	SR-28 27.5 kg	SR-35 33 kg MOST POPULAR	SR-45 45 kg	SR-60 60 kg MOST POPULAR	SR-80 75 kg MOST POPULAR
ELECTRIC HEATED										
Heating power	kW	12	18	18	24	30	36	54	72	72
Total installed power	kW	12.67	18.67	18.67	24.97	31.15	37.15	55.9	74.25	74.65
Evaporation capacity	L/h	9.3	13.5	14.1	17	26.1	31.1	40.2	60.2	64
Hourly output (dry linen)	kg/h	20.3	26.9	28.3	34	48.4	60	80.4	120	128.6
GAS HEATED										
Heating power	kW	20.5	20.5	20.5	31	41	41	60	90	120
Installed electrical power	kW	0.67	0.67	0.67	0.97	1.15	1.15	1.9	2.25	2.65
Natural gas consumption	MJ/h	74	74	74	112	148	148	216	324	432
LPG consumption	MJ/h	74	74	74	112	148	148	216	324	432
Evaporation capacity	L/h	14.5	15.4	16.3	20	30.9	32.1	42.5	65.8	86.5
Hourly output (dry linen)	kg/h	29	30.25	32.6	40	59.3	63.9	84.4	128.6	173.1
Gas inlet (BSPP)	inch	½"	½"	½"	½"	½"	½"	¾"	¾"	¾"
STEAM HEATED · STANDARD PRESSURE										
Heating power	kW	30	30	30	49.2	50.1	50.1	91	128	128
Installed electrical power	kW	0.67	0.67	0.67	0.97	1.15	1.15	1.9	2.25	2.65
Steam consumption at 8 barG	kg/h	53	53	53	87	89	89	121	171	171
Steam pressure	barG	6-9	6-9	6-9	6-9	6-9	6-9	7-12	7-12	7-12
Steam inlet / condensate outlet	inch	¾"	¾"	¾"	1"	1"	1"	1"	1"	1"
ELECTRICAL SUPPLY · ELECTRIC HEATED										
230 V single phase	cable / A	3×25 / 63 A	–	–	–	–	–	–	–	–
400 V three phase	cable / A	5×4 / 25 A	5×10 / 32 A	5×10 / 32 A	5×10 / 40 A	5×16 / 63 A	5×16 / 63 A	5×35 / 100 A	5×50 / 125 A	5×50 / 125 A
ELECTRICAL SUPPLY · GAS OR STEAM HEATED										
230 V single phase	cable / A	3×1.5 / 16 A	3×1.5 / 16 A	3×1.5 / 16 A	3×1.5 / 16 A	3×1.5 / 16 A	3×1.5 / 16 A	–	–	–
400 V three phase	cable / A	3×1.5 / 16 A	3×1.5 / 20 A	3×1.5 / 16 A	3×1.5 / 16 A	3×1.5 / 16 A	3×1.5 / 16 A	5×2.5 / 20 A	4×2.5 / 25 A	5×2.5 / 25 A

– = not offered on the manufacturer's sheet. Gas consumption in MJ/h from Fagor's Australia / NZ gas tables. Low pressure steam coil (3–6 barG; 4–7 barG on SR-45 to SR-80) and thermal oil heating also available. Electrical ratings are Fagor's; final cable sizing to AS/NZS 3000 and 3008 by the installing electrician.

Fagor SR tumble dryers

MAIN DIMENSIONS · ALL DIMENSIONS IN MILLIMETRES

GENERAL ARRANGEMENT · SR-11 TO SR-22

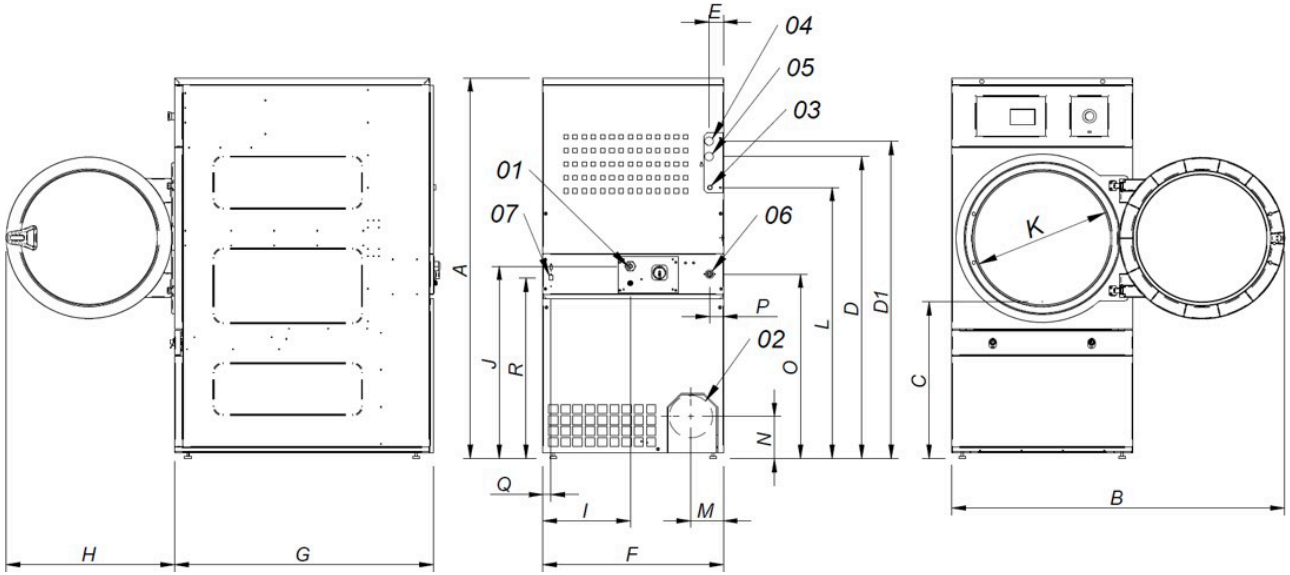

CONNECTIONS

1. Electrical connection
2. Exhaust outlet Ø200
3. Gas inlet ½"
4. Steam inlet ¾" (1" on SR-22)
5. Condensate outlet ¾" (1" on SR-22)
6. Fire valve ¾" (1" on SR-22)
7. Ethernet connection

Model	A	B	C	D	D1	E	E1	F	G	H	I	J	K	L	M	N	O	P	Q	R
SR-11	1694	1447	689	1354	1422	68	68	785	855	735	380	870	575	1226	133	180	830	65	35	805
SR-14	1694	1447	689	1354	1422	68	68	785	989	735	380	870	575	1226	133	180	830	65	35	805
SR-18	1694	1447	689	1354	1422	68	68	785	1125	735	380	870	575	1226	133	180	830	65	35	805
SR-22	1812	1552	743	1430	1532	112	55	890	1255	735	107	920	575	1344	238	180	885	65	37	860

Letter positions are the same on every model in this group. Gas, steam and exhaust positions as numbered at right.

Fagor SR tumble dryers

MAIN DIMENSIONS · ALL DIMENSIONS IN MILLIMETRES

GENERAL ARRANGEMENT · SR-28 / SR-35

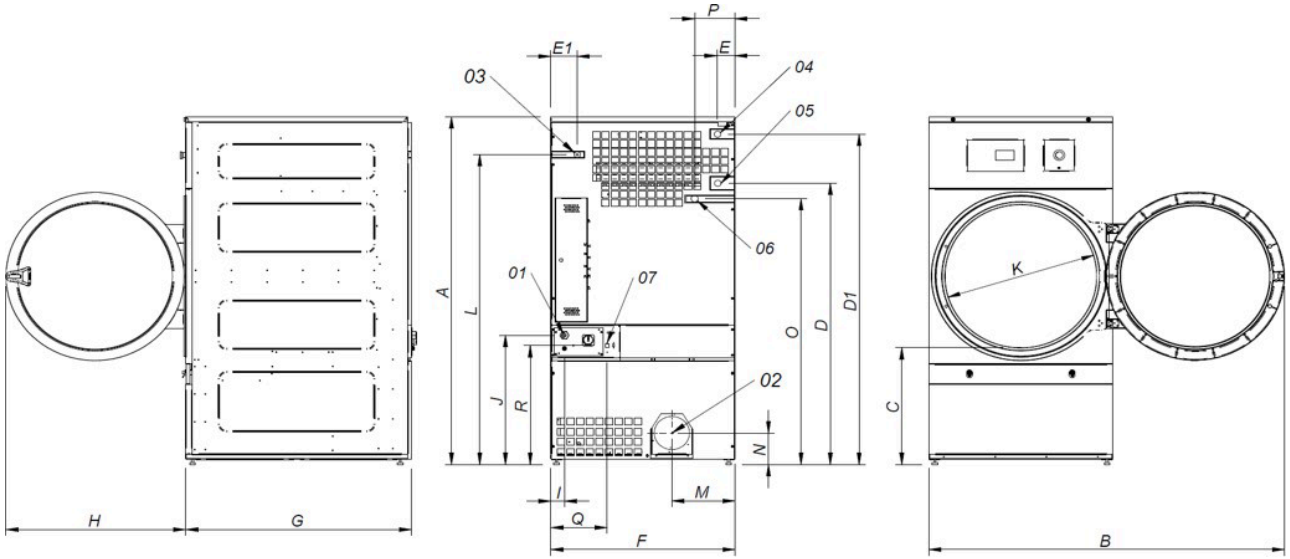

CONNECTIONS

1. Electrical connection
2. Exhaust outlet Ø200
3. Gas inlet ½"
4. Steam inlet 1"
5. Condensate outlet 1"
6. Fire valve ¾"
7. Ethernet connection

Model	A	B	C	D	D1	E	E1	F	G	H	I	J	K	L	M	N	O	P	Q	R
SR-28	1975	1910	660	1590	1875	102	141	985	1054	970	70	730	802	1768	337	178	1510	215	301	676
SR-35	1975	1910	660	1590	1875	102	141	985	1210	970	70	730	802	1768	337	178	1510	215	301	676

Letter positions are the same on every model in this group. Gas, steam and exhaust positions as numbered at right.

Fagor SR tumble dryers

MAIN DIMENSIONS · ALL DIMENSIONS IN MILLIMETRES

GENERAL ARRANGEMENT · SR-45 / SR-60 / SR-80

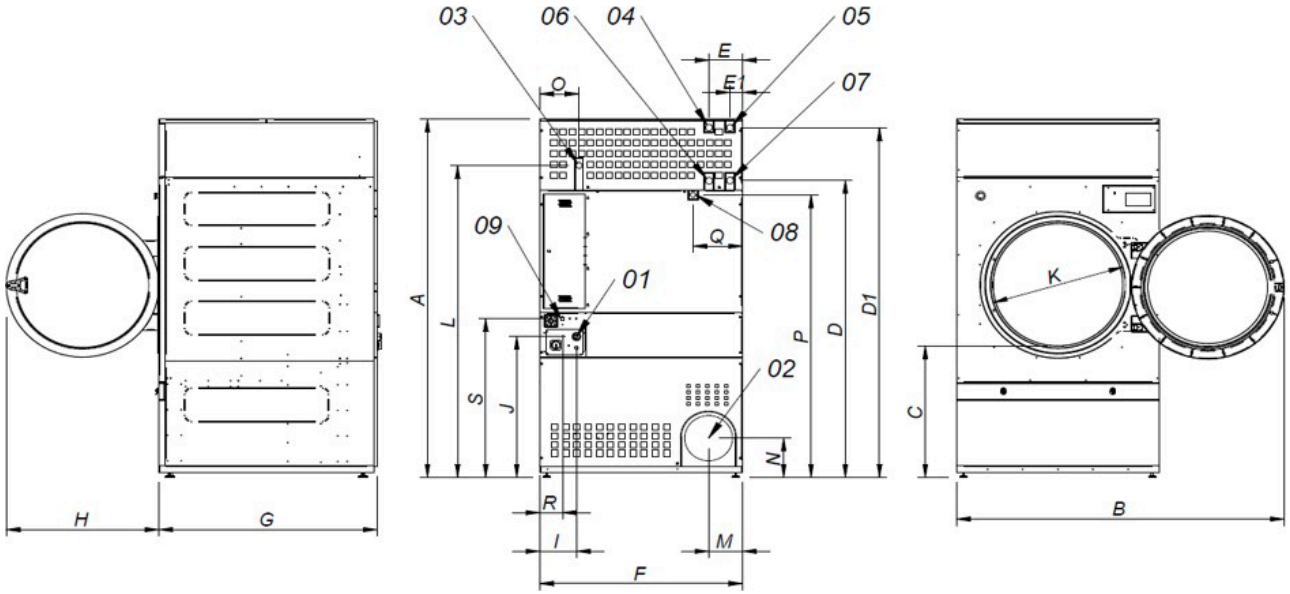

CONNECTIONS

1. Electrical connection
2. Exhaust outlet Ø300
3. Gas inlet ¾"
4. Steam inlet 1" (SR-45)
5. Steam inlet 1" (SR-60 / SR-80)
6. Condensate outlet 1" (SR-45)
7. Condensate outlet 1" (SR-60 / SR-80)
8. Fire valve ¾"
9. Ethernet connection

Model	A	B	C	D	D1	E	E1	F	G	H	I	J	K	L	M	N	O	P	Q	R	S
SR-45	2380	2045	874	1981	2311	211	80	1270	1106	956	248	935	802	2088	214	240	244	1841	308	160	1053
SR-60	2380	2045	874	1981	2311	211	80	1270	1366	956	248	935	802	2088	214	240	244	1841	308	160	1053
SR-80	2380	2045	874	1981	2311	211	80	1270	1598	956	248	935	802	2088	214	240	244	1841	308	160	1053

Letter positions are the same on every model in this group. Gas, steam and exhaust positions as numbered at right.