SPENCER Systems | FAGOR

COMMERCIAL TUMBLE DRYERS · ECONOMIC LINE

Fagor SC

Single pocket · M control

Simple, hard-working single-pocket dryers from 10.5 to 33 kg in electric, gas or steam heating, with an easy time and temperature controller. Supplied, installed and serviced across Australia by Spencer Systems.

10.5–33 kg
LOAD CAPACITY AT 1:20

3 heat sources
ELECTRIC, GAS OR STEAM

Reversing
FREQUENCY INVERTER STANDARD

M control
TIME AND TEMPERATURE

SC-11 | SC-14 | SC-18 | SC-22 | SC-28 | SC-35

Installed and serviced by the people who sell it · 1300 70 69 70 · spencersystems.com.au
Images and data courtesy of Fagor Professional.



Fagor SC dryer
White panels · M programmer

STANDARD ON EVERY MODEL

- M programmer: set time and temperature
- Frequency inverter with reversing drum action
- EFFICIENT AIRFLOW with large debris filter
- COOL DOWN at end of cycle
- Large door, hinges open 180°, reversible door
- OPL dryer convertible to self-service
- Technical menu with statistics; easy access to components
- White panels

OPTIONS

Galvanised steel drum · rear door opening · rear panel external air inlet with filter · reduced 12 kW electric heating (SC-14 / SC-18) · low pressure steam coil · payment systems for self-service · wooden packaging · other voltages

Fagor SC tumble dryers

M CONTROL · SINGLE POCKET · 10.5–33 KG

TECHNICAL SPECIFICATIONS · GENERAL AND SHIPPING

Load capacity shown under each model at 1:20.

SPECIFICATION	Unit	SC-11 10.5 kg	SC-14 13.5 kg	SC-18 16.5 kg	SC-22 22 kg MOST POPULAR	SC-28 27.5 kg	SC-35 33 kg MOST POPULAR
CAPACITY							
Load at 1:18	kg	11.7	15	18.3	24.3	30.6	36.7
Load at 1:20	kg	10.5	13.5	16.5	22	27.5	33
DRUM							
Drum diameter	mm	750	750	750	835	947	947
Drum length	mm	475	610	746	800	780	936
Drum volume	L	210	270	330	440	550	660
DOOR							
Door opening diameter	mm	574	574	574	574	802	802
Floor to door centre	mm	976	976	976	1030	1040	1040
Floor to bottom of door	mm	618	618	618	672	578	578
DRIVE AND AIRFLOW							
Drum motor	kW	0.37	0.37	0.37	0.37	0.55	0.55
Fan motor	kW	0.25	0.25	0.25	0.55	0.55	0.55
Nominal airflow	m^3/h	850	850	850	1200	1200	1200
Exhaust outlet diameter	mm	200	200	200	200	200	200
Sound level	dB	64	64	64	65	65	65
HEAT DISSIPATION TO ROOM							
Total, maximum	kW	1.2	1.8	1.8	2.4	3	3.6
Front panel, maximum	kW	0.8	1.3	1.3	1.7	2.1	2.5
SIZE AND SHIPPING · NET / GROSS (PACKED)							
Width	mm	785 / 865	785 / 865	785 / 865	890 / 970	985 / 1065	985 / 1065
Depth	mm	855 / 940	989 / 1074	1125 / 1210	1255 / 1345	1054 / 1154	1210 / 1310
Height	mm	1694 / 1840	1694 / 1840	1694 / 1840	1812 / 1940	1975 / 2080	1975 / 2080
Weight	kg	172 / 180	180 / 190	187 / 200	210 / 230	230 / 260	260 / 285

HEATING AND ELECTRICAL SUPPLY

Output is kg of dry linen per hour. Cable given as cores × mm² / device rating.

SPECIFICATION	Unit	SC-11 10.5 kg	SC-14 13.5 kg	SC-18 16.5 kg	SC-22 22 kg MOST POPULAR	SC-28 27.5 kg	SC-35 33 kg MOST POPULAR
ELECTRIC HEATED							
Heating power	kW	12	18	18	24	30	36
Total installed power	kW	12.67	18.67	18.67	24.97	31.15	37.15
Evaporation capacity	L/h	9.3	13.5	14.1	17	26.1	31.1
Hourly output (dry linen)	kg/h	20.3	26.9	28.3	34	48.4	60
GAS HEATED							
Heating power	kW	20.5	20.5	20.5	31	41	41
Installed electrical power	kW	0.67	0.67	0.67	0.97	1.15	1.15
Natural gas consumption	MJ/h	74	74	74	112	148	148
LPG consumption	MJ/h	74	74	74	112	148	148
Evaporation capacity	L/h	14.5	15.4	16.3	20	30.9	32.1
Hourly output (dry linen)	kg/h	29	30.25	32.6	40	59.3	63.9
Gas inlet (BSPP)	inch	½"	½"	½"	½"	½"	½"
STEAM HEATED · STANDARD PRESSURE							
Heating power	kW	30	30	30	49.2	50.1	50.1
Installed electrical power	kW	0.67	0.67	0.67	0.97	1.15	1.15
Steam consumption at 8 barG	kg/h	53	53	53	87	89	89
Steam pressure	barG	6-9	6-9	6-9	6-9	6-9	6-9
Steam inlet / condensate outlet	inch	¾"	¾"	¾"	1"	1"	1"
ELECTRICAL SUPPLY · ELECTRIC HEATED							
230 V single phase	cable / A	3×25 / 63 A	–	–	–	–	–
400 V three phase	cable / A	5×4 / 25 A	5×10 / 32 A	5×10 / 32 A	5×10 / 40 A	5×16 / 63 A	5×16 / 63 A
ELECTRICAL SUPPLY · GAS OR STEAM HEATED							
230 V single phase	cable / A	3×1.5 / 16 A	3×1.5 / 16 A	3×1.5 / 16 A	3×1.5 / 16 A	3×1.5 / 16 A	3×1.5 / 16 A
400 V three phase	cable / A	3×1.5 / 16 A	3×1.5 / 16 A	3×1.5 / 16 A	3×1.5 / 16 A	3×1.5 / 16 A	3×1.5 / 16 A

– = not offered on the manufacturer's sheet. Gas consumption in MJ/h from Fagor's Australia / NZ gas tables. Low pressure steam coil (3–6 barG) also available. Electrical ratings are Fagor's; final cable sizing to AS/NZS 3000 and 3008 by the installing electrician.

Fagor SC tumble dryers

MAIN DIMENSIONS · ALL DIMENSIONS IN MILLIMETRES

GENERAL ARRANGEMENT · SC-11 TO SC-22

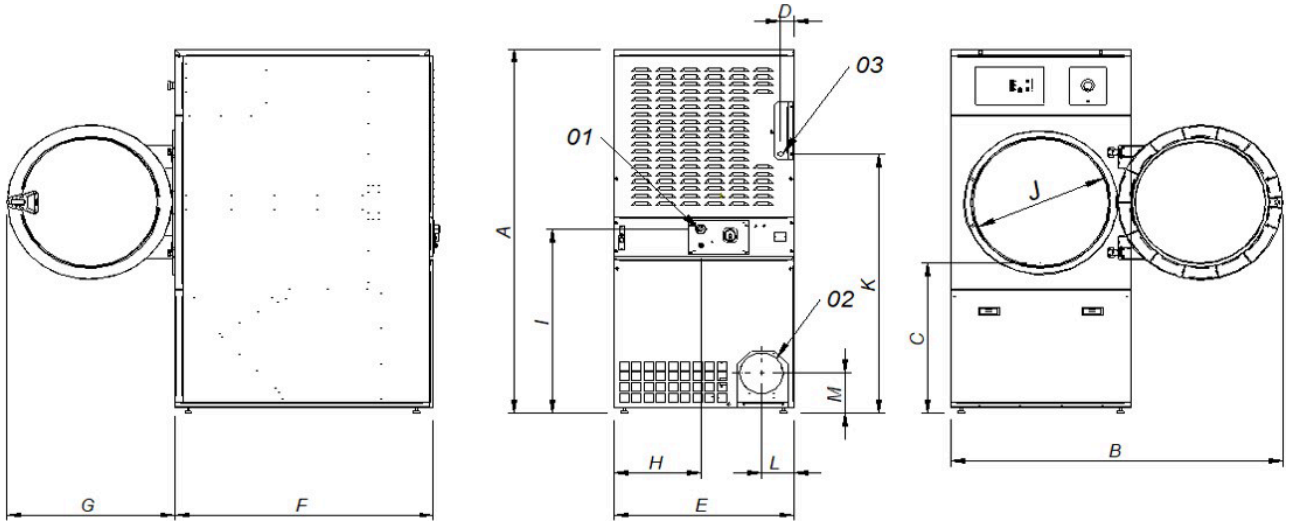

CONNECTIONS

1. Electrical connection
2. Exhaust outlet Ø200
3. Gas inlet ½"

Model	A	B	C	D	E	F	G	H	I	J	K	L	M	N	O
SC-11	1694	1447	689	68	785	855	735	380	870	575	1226	133	180	–	–
SC-14	1694	1447	689	68	785	989	735	380	870	575	1226	133	180	–	–
SC-18	1694	1447	689	68	785	1125	735	380	870	575	1226	133	180	35	805
SC-22	1812	1552	743	112	890	1255	735	107	920	575	1344	238	180	37	860

Letter positions are the same on every model in this group. N and O are given by Fagor for SC-18 / 22 only.

Fagor SC tumble dryers

MAIN DIMENSIONS · ALL DIMENSIONS IN MILLIMETRES

GENERAL ARRANGEMENT · SC-28 / SC-35

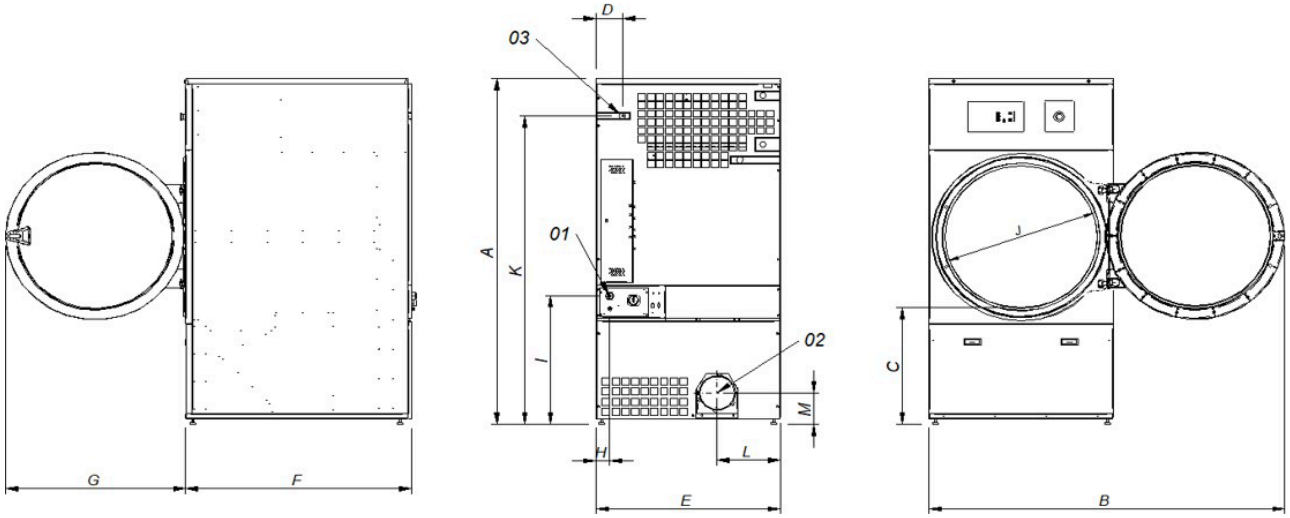

CONNECTIONS

1. Electrical connection
2. Exhaust outlet Ø200
3. Gas inlet ½"

Model	A	B	C	D	E	F	G	H	I	J	K	L	M
SC-28	1975	1910	660	141	985	1054	970	70	730	802	1768	337	178
SC-35	1975	1910	660	141	985	1210	970	70	730	802	1768	337	178

Letter positions are the same on both models.