SPENCER Systems | FAGOR

COMPACT PROFESSIONAL LAUNDRY

Fagor 10 kg

LAP-10 washer · SRP-10 dryer

A compact 10 kg washer and matching dryer for cafés, gyms, aged care, motels and small laundromats. Run them side by side or stack the dryer on the washer. Supplied, installed and serviced across Australia by Spencer Systems.

10 kg
WASHER AND DRYER AT 1:10 / 1:20

450 G
WASHER EXTRACTION

680 mm
WIDE · STACKABLE

< 45 min
DRYER CYCLE (FAGOR FIGURE)

LAP-10 TP2 V | LAP-10 TP2 P | SRP-10 TP2

Installed and serviced by the people who sell it · 1300 70 69 70 · spencersystems.com.au
Images and data courtesy of Fagor Professional.



LAP-10 TP2 washer
Drain valve (V) or drain pump (P)



SRP-10 TP2 dryer
Electric or gas heated

STANDARD ON EVERY MODEL

- TP2 touch control: 4.3" on the washer, 7" on the dryer
- USB and FagorKonnect: programming, telemetry, remote payment
- OPL or self-service (coin) set-up
- Washer: 8 dosing signals, 2 water inlets, 6 kW heating
- Washer: industrial bearing housing, same motor and inverter as the LA range
- Washer: AISI 304 drum and tub, 4-compartment dispenser
- Dryer: 6.75 kW electric (4.5 kW option) or 6.7 kW gas
- Dryer stacks on the washer or on another dryer

OPTIONS

Washer: DQ-2 dosing pump kit · extra DB-1 pumps · double drain · drain pump kit · silicone gasket · reversible door · plinths (ergonomic, mops, water recovery) · stainless casing · coin / token kit · auto door unlock.
Dryer: iDRY humidity control · ergonomic base · stainless AISI 304 drum · stainless cabinet · reversible door · bottom control panel when stacked · coin / token kit

LAP-10 TP2 WASHER

V = drain valve model · P = drain pump model.

SPECIFICATION	Unit	LAP-10 V 10 kg	LAP-10 P 10 kg
DRUM			
Load capacity 1:9 / 1:10	kg	11 / 10	11 / 10
Drum volume	L	100	100
Drum diameter	mm	532	532
Drum depth	mm	425	425
PERFORMANCE			
Wash speed / spin speed	rpm	50 / 1250	50 / 1250
G-factor	–	450	450
Maximum force transmitted	kN	1.57 ±0.53	1.57 ±0.53
Dynamic force frequency	Hz	18.33	18.33
Noise level	dB	< 70	< 70
Self-service (coin) version	–	Option	Option
Double drain	–	No	No
Weighing / tilting system	–	No / No	No / No
DOOR			
Door centre height / door base height	mm	537 / 280	537 / 280
Door opening diameter	mm	373	373
POWER			
Drive motor	kW	0.75	0.75
Electric heating	kW	6	6
Total power, electric heated	kW	6.25	6.25
Total power, hot water / steam heated	kW	0.75	0.75

SPECIFICATION	Unit	LAP-10 V 10 kg	LAP-10 P 10 kg
ELECTRICAL SUPPLY · ELECTRIC HEATED			
230 V single phase (1 + N + E)	cable / A	2×6+E / 40 A	2×6+E / 40 A
400 V three phase (3 + N + E)	cable / A	4×1.5+E / 16 A	4×1.5+E / 16 A
ELECTRICAL SUPPLY · HOT WATER OR STEAM HEATED			
230 V single phase (1 + N + E)	cable / A	2×1.5+E / 16 A	2×1.5+E / 16 A
400 V three phase (3 + N + E)	cable / A	–	–
WATER AND DRAINAGE			
Water inlets	inch	2 × ¾"	2 × ¾"
Water mains pressure	bar	2–4	2–4
Drain outlet	inch	2" drain valve	1" drain pump
Drainage capacity	L/min	140	140
SIZE AND SHIPPING · NET / GROSS (PACKED)			
Width	mm	680 / 710	680 / 710
Depth	mm	742 / 832	742 / 832
Height	mm	1040 / 1158	1040 / 1158
Weight	kg	155 / 166	155 / 166
Packed volume	m^3	0.68	0.68

– = not offered on the manufacturer's sheet. Supply cable given as cores × mm^2 (+ earth) / protective device rating. Electrical ratings are Fagor's; final cable sizing to AS/NZS 3000 and 3008 by the installing electrician.

SRP-10 TP2 DRYER

Galvanised drum as standard; electric (6.75 or 4.5 kW) or gas heated.

SPECIFICATION	Unit	SRP-10 10 kg
CAPACITY AND DRUM		
Load at 1:20	kg	10
Drum volume	L	200
Drum diameter	mm	590
Drum depth	mm	690
DOOR		
Floor to door centre	mm	554
Floor to bottom of door	mm	320
Door opening diameter	mm	480
POWER AND CONSUMPTION		
Drum motor	kW	0.37
Electric heating (option)	kW	6.75 / 4.5
Gas heating	kW	6.7
Natural gas consumption	MJ/h	25
LPG consumption	MJ/h	25
Noise level	dB	62

SPECIFICATION	Unit	SRP-10 10 kg
ELECTRICAL SUPPLY · ELECTRIC HEATED		
230 V single phase	cable / A	3×10 / 40 A
400 V three phase	cable / A	5×2.5 / 16 A
ELECTRICAL SUPPLY · GAS HEATED		
230 V single phase	cable / A	3×1.5 / 10 A
400 V three phase	cable / A	3×1.5 / 10 A
GAS AND EXHAUST		
Gas inlet	inch	½"
Exhaust outlet diameter	mm	100
Maximum airflow	m³/h	300
SIZE AND SHIPPING · NET / GROSS (PACKED)		
Width	mm	680 / 710
Depth	mm	775 / 832
Height	mm	1056 / 1141
Weight	kg	92.6 / 104.1

Supply cable given as cores × mm² (+ earth) / protective device rating. Electrical ratings are Fagor's; final cable sizing to AS/NZS 3000 and 3008 by the installing electrician.

Fagor Professional 10 kg

MAIN DIMENSIONS · ALL DIMENSIONS IN MILLIMETRES

LAP-10 TP2 WASHER

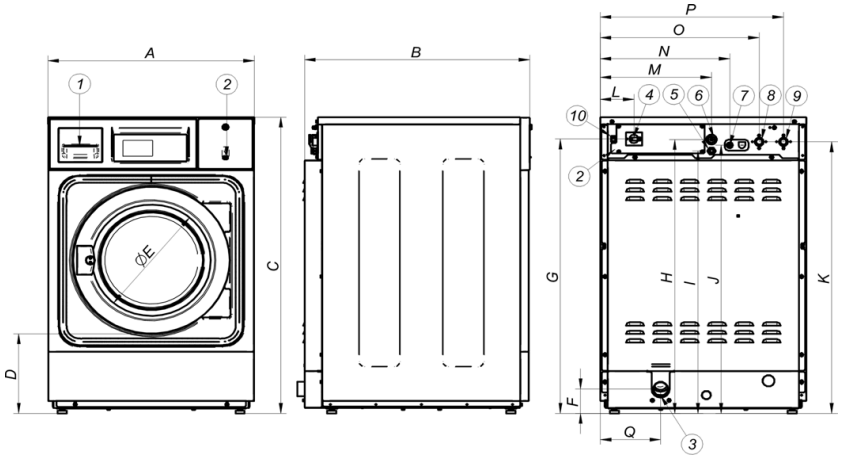

Letter	LAP-10 V	LAP-10 P
A	680	680
B	742	742
C	1040	1040
D	278	278
E	373	373
F	86	86
G	964	964
H	962	962
I	922	922
J	942	942
K	954	954
L	110	110
M	366	366
N	427	427
O	524	524
P	603	603
Q	199	199

1. Soap dispenser
2. USB port
3. Drain
4. Main switch
5. Electrical connection, liquid soap pumps
6. Electrical connection
7. Liquid soap connection
8. Cold water inlet
9. Hot water inlet
10. Ethernet port

SRP-10 TP2 DRYER

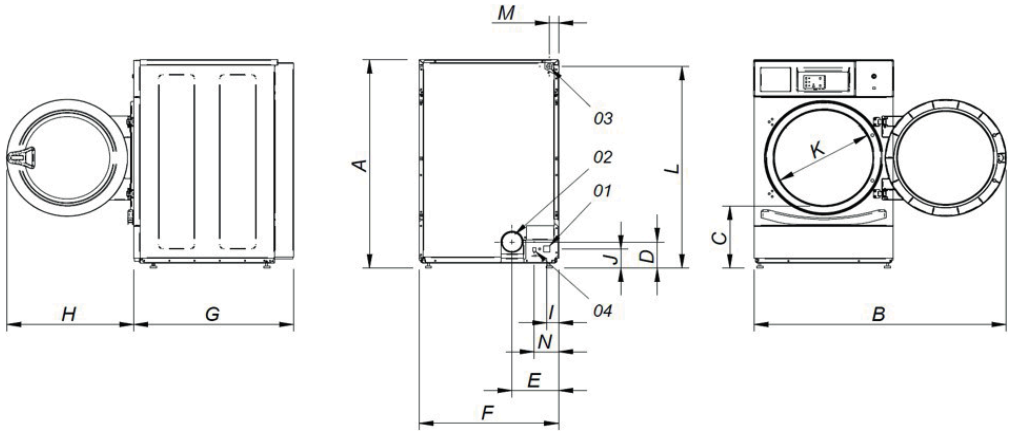

Letter	SRP-10
A	1056
B	1227
C	320
D	140
E	226
F	680
G	775
H	615
I	57
J	91
K	480
L	1015
M	50
N	118

1. Electrical connection
2. Exhaust outlet Ø100
3. Gas inlet ½"
4. Ethernet connection

Letters refer to the drawing above each table. All dimensions in millimetres.