SPENCER Systems | FAGOR

HIGH SPIN WASHER EXTRACTORS

Fagor LA

High spin · TP2 control

Free-standing, high-spin washers with a suspended drum, from 10 to 115 kg. Up to 500 G extraction takes more water out before the dryer. Supplied, installed and serviced across Australia by Spencer Systems.

10–115 kg
LOAD CAPACITY AT 1:10

Up to 500 G
EXTRACTION G-FACTOR

Free standing
SUSPENDED DRUM, LEVELLING FEET

7" touch
TP2 · FAGORKONNECT

LA-11 | LA-14 | LA-18 | LA-22 | LA-28 | LA-35C
LA-45C | LA-60C | LA-80C | LA-100C | LA-120C



LA-11 to LA-28
Free standing · suspended drum



LA-35C to LA-120C
Medium and high capacity

STANDARD ON EVERY MODEL

- 7" programmable TP2 touch screen, 37 languages
- 8 dosing signals, expandable to 14
- USB and FagorKonnect: programming, telemetry, remote service
- Stainless AISI 304 drum and tub
- Electronic imbalance control with frequency inverter
- LOADING AID: water and rotation control
- 4-compartment detergent dispenser
- OPL or self-service (coin) set-up, LA-11 to LA-35C

OPTIONS

DQ-2 dosing pump kit · extra DB-1 pump · double drain · drain pump (LA-11 / 14) · normally closed valve · water FULL FLOW recirculation · Auto Weight sensor on feet · relay card for 6 extra dosing signals · silicone gasket · reversible door · tropicalised board · steam conversion kit · plinths (mops, levelling, 850 mm door base) · stainless casing and front panel · coin / token kit · auto door unlock

Installed and serviced by the people who sell it · 1300 70 69 70 · spencersystems.com.au
Images and data courtesy of Fagor Professional.

TECHNICAL SPECIFICATIONS · LA-11 TO LA-45C

Suspended drum on levelling feet, stainless AISI 304 drum and tub.

SPECIFICATION	Unit	LA-11 10 kg	LA-14 13 kg	LA-18 18 kg MOST POPULAR	LA-22 22 kg MOST POPULAR	LA-28 28 kg MOST POPULAR	LA-35C 35 kg MOST POPULAR	LA-45C 42 kg
DRUM								
Load capacity 1:9 / 1:10	kg	11 / 10	14 / 13	20 / 18	25 / 22	31 / 28	39 / 35	47 / 42
Drum volume	L	100	130	180	220	280	350	450
Drum diameter	mm	532	620	700	700	770	860	860
Drum depth	mm	425	430	470	560	585	602	720
PERFORMANCE								
Wash speed / spin speed	rpm	50 / 1300	50 / 1204	47 / 1133	47 / 1071	45 / 1024	42.5 / 966	42.5 / 966
G-factor	–	500	500	500	450	450	450	450
Maximum force transmitted	kN	2.08 ±0.75	2.49 ±1.05	3.41 ±1.4	4.12 ±1.4	5.59 ±1.75	7.36 ±2.45	7.36 ±2.45
Dynamic force frequency	Hz	16.7	16.7	16	16	15	14.3	14.3
Noise level	dB	< 70	< 70	< 70	< 70	< 70	< 70	< 70
Self-service (coin) version	–	Yes	Yes	Yes	Yes	Yes	Yes	No
Double drain	–	No	Option	Option	Option	Option	Option	Option
Weighing / tilting system	–	Option / No	Option / No	Option / No	Option / No	Option / No	Option / No	Option / No
DOOR								
Door centre height / door base height	mm	630 / 370	700 / 440	765 / 450	765 / 450	865 / 560	1000 / 640	1000 / 640
Door opening diameter	mm	373	373	460	460	460	560	560
POWER								
Drive motor	kW	0.75	1.1	2.2	2.2	4	6	6
Electric heating	kW	6	9	12	12	18	21	21
Total power, electric heated	kW	6.25	9.4	12.75	12.75	19.2	22	22
Total power, hot water / steam heated	kW	0.75	1.1	2.2	2.2	4	6	6

CONNECTIONS AND SHIPPING · LA-11 TO LA-45C

Supply cable given as cores × mm² (+ earth) / protective device rating.

SPECIFICATION	Unit	LA-11 10 kg	LA-14 13 kg	LA-18 18 kg MOST POPULAR	LA-22 22 kg MOST POPULAR	LA-28 28 kg MOST POPULAR	LA-35C 35 kg MOST POPULAR	LA-45C 42 kg
ELECTRICAL SUPPLY · ELECTRIC HEATED								
230 V single phase (1 + N + E)	cable / A	2×6+E / 40 A	2×10+E / 50 A	2×16+E / 63 A	2×16+E / 63 A	–	–	–
400 V three phase (3 + N + E)	cable / A	4×1.5+E / 16 A	4×1.5+E / 16 A	4×4+E / 32 A	4×4+E / 32 A	4×4+E / 32 A	4×6+E / 40 A	4×6+E / 40 A
ELECTRICAL SUPPLY · HOT WATER OR STEAM HEATED								
230 V single phase (1 + N + E)	cable / A	2×1.5+E / 16 A	2×1.5+E / 16 A	2×1.5+E / 16 A	2×1.5+E / 16 A	2×4+E / 32 A	–	–
400 V three phase (3 + N + E)	cable / A	–	–	–	–	4×1.5+E / 16 A	4×1.5+E / 16 A	4×1.5+E / 16 A
WATER, STEAM AND DRAINAGE								
Water inlets	inch	3 × ¾"	3 × ¾"	3 × ¾"	3 × ¾"	3 × ¾"	3 × ¾"	3 × ¾"
Water mains pressure	bar	2–4	2–4	2–4	2–4	2–4	2–4	2–4
Maximum water consumption	L/h	71.4	88.8	118.3	145	175.5	261.3	335.9
Steam inlet (steam model)	inch	½"	½"	½"	½"	¾"	¾"	¾"
Maximum steam consumption	kg/h	7	8.5	12	12	15	18	18
Drain outlet	inch	3"	3"	3"	3"	3"	3"	3"
Drainage capacity	L/min	200	200	200	200	200	200	200
SIZE AND SHIPPING · NET / GROSS (PACKED)								
Width	mm	692 / 738	788 / 850	884 / 945	884 / 945	979 / 1045	1095 / 1205	1095 / 1205
Depth	mm	830 / 975	869 / 1015	913 / 1030	1003 / 1115	1080 / 1210	1184 / 1330	1304 / 1440
Height	mm	1185 / 1440	1307 / 1600	1405 / 1680	1405 / 1680	1550 / 1810	1730 / 1850	1730 / 1850
Weight	kg	198 / 230	236 / 274.5	344.5 / 388	360 / 403.5	524.5 / 548.5	735 / 786	747 / 853
Packed volume	m³	1.03	1.38	1.63	1.77	2.28	2.7	3.3

– = not offered on the manufacturer's sheet. Max. water consumption on programme 20 at 75% load. LA-35C / 45C: Fagor lists net height as 1730 mm in the data table and 1767 mm (C) on the drawing. Electrical ratings are Fagor's; final cable sizing to AS/NZS 3000 and 3008 by the installing electrician.

TECHNICAL SPECIFICATIONS · LA-60C TO LA-120C

High-capacity models with weighing and tilting options.

SPECIFICATION	Unit	LA-60C 59 kg	LA-80C 77 kg	LA-100C 95 kg	LA-120C 115 kg
DRUM					
Load capacity 1:9 / 1:10	kg	65 / 59	85 / 77	105 / 95	130 / 115
Drum volume	L	590	770	950	1150
Drum diameter	mm	1048	1048	1360	1360
Drum depth	mm	680	892	637	775
PERFORMANCE					
Wash speed / spin speed	rpm	38 / 875	38 / 875	34 / 678	34 / 678
G-factor	–	450	450	350	350
Maximum force transmitted	kN	18 ±4.2	23 ±4.8	37.77 ±5.25	37.77 ±5.25
Dynamic force frequency	Hz	12.66	12.66	11.33	11.33
Noise level	dB	< 70	< 70	< 70	< 70
Self-service (coin) version	–	No	No	No	No
Double drain	–	Option	Option	Option	Option
Weighing / tilting system	–	Option	Option	Option	Option
DOOR					
Door centre height / door base height	mm	1170 / 810	1170 / 810	1330 / 900	1330 / 900
Door opening diameter	mm	560	560	700	700
POWER					
Drive motor	kW	15	15	15	15
Electric heating	kW	36	48 †	–	–
Total power, electric heated	kW	39	51 †	–	–
Total power, hot water / steam heated	kW	15	15	15	15

† LA-80C: 48 kW heating (51 kW total) on 400 V; 36 kW (39 kW total) on the 230 V version. LA-100C / 120C are hot water or steam heated only.

CONNECTIONS AND SHIPPING · LA-60C TO LA-120C

Supply cable given as cores × mm² (+ earth) / protective device rating.

SPECIFICATION	Unit	LA-60C 59 kg	LA-80C 77 kg	LA-100C 95 kg	LA-120C 115 kg
ELECTRICAL SUPPLY · ELECTRIC HEATED					
230 V single phase (1 + N + E)	cable / A	–	–	–	–
400 V three phase (3 + N + E)	cable / A	4×16+E / 63 A	4×25+E / 80 A	Not available	Not available
ELECTRICAL SUPPLY · HOT WATER OR STEAM HEATED					
230 V single phase (1 + N + E)	cable / A	–	–	–	–
400 V three phase (3 + N + E)	cable / A	4×10+E / 50 A	4×10+E / 50 A	4×6+E / 40 A	4×6+E / 40 A
WATER, STEAM AND DRAINAGE					
Water inlets	inch	3 × 1"	3 × 1"	3 × 1½"	3 × 1½"
Water mains pressure	bar	2–4	2–4	2–4	2–4
Maximum water consumption	L/h	598 **	781 **	1058 **	1254 **
Steam inlet (steam model)	inch	¾"	¾"	1¼"	1¼"
Maximum steam consumption	kg/h	21	25	26.5	26.5
Compressed air inlet	bar	–	–	4	4
Drain outlet	inch	3"	3"	4"	4"
Drainage capacity	L/min	200	200	500	500
SIZE AND SHIPPING · NET / GROSS (PACKED)					
Width	mm	1420 / 1600	1420 / 1600	1836 / 1940	1836 / 1940
Depth	mm	1433 / 1595	1645 / 1805	1710 / 2030	1832 / 2030
Height	mm	1890 / 1930	1890 / 1930	2245 / 2290	2245 / 2290
Weight	kg	1454 / 1544	1800 / 2000	2300 / 2600	2762 / 3058
Packed volume	m³	4.9	5.6	9	9

– = not offered on the manufacturer's sheet. ** Max. water consumption on programme 2 at 100% load. Compressed air applies to LA-100C / 120C. Electrical ratings are Fagor's; final cable sizing to AS/NZS 3000 and 3008 by the installing electrician.

Fagor LA washer extractors

MAIN DIMENSIONS · ALL DIMENSIONS IN MILLIMETRES

GENERAL ARRANGEMENT · LA-11 TO LA-45C

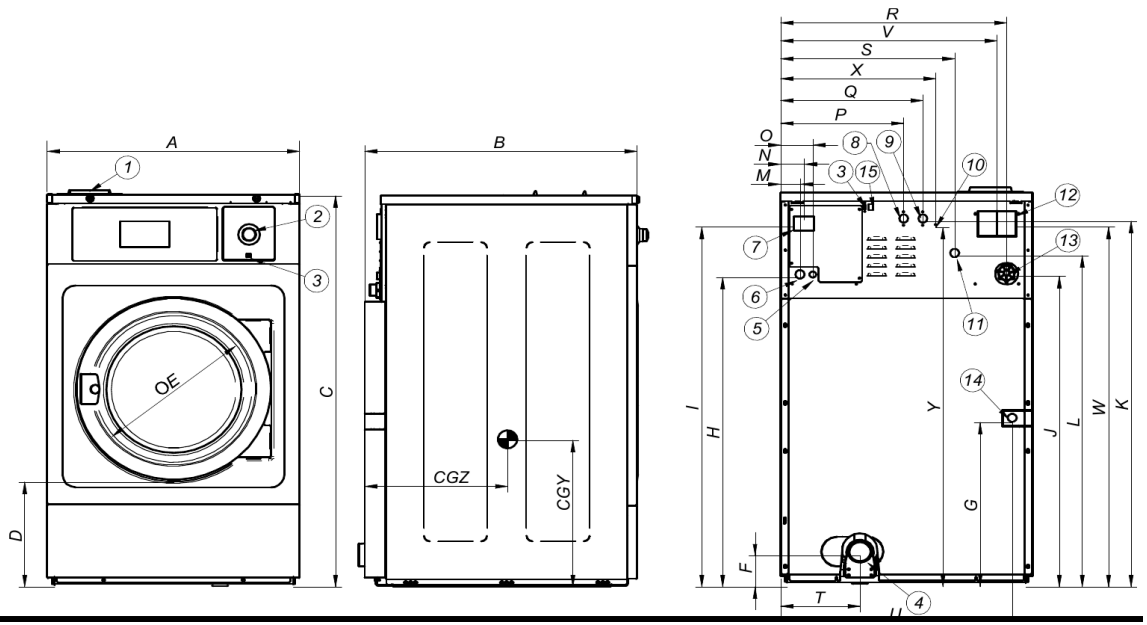

CONNECTIONS

1. Soap dispenser
2. Emergency stop
3. USB port
4. Drain
5. Electrical connection, liquid soap pumps
6. Electrical connection
7. Main switch
8. Auxiliary water inlet
9. Hot water inlet
10. Equipotential connection
11. Cold water inlet
12. Blur output / water overload
13. Liquid soap connection
14. Steam connection
15. Ethernet port

Model	A	B	C	D	E	F	G	H	I	J	K	L	M	N	O	P	Q	R	S	T	U	V	W	X	Y	CGY	CGZ
LA-11	692	830	1185	370	373	125	354	913	1085	916	1100	985	61	74	101	292	352	610	448	226	626	580	1080	442	1145	424	577
LA-14	788	869	1307	440	373	125	385	1034	1202	1037	1221	1106	61	74	101	385	445	706	544	243	718	676	1202	485	1201	450	651
LA-18	884	913	1405	450	460	125	380	1135	1303	1138	1322	1207	61	74	101	429	509	802	640	322	814	772	1303	569	1297	464	702
LA-22	884	1003	1405	450	460	125	380	1135	1303	1138	1322	1207	61	74	101	429	509	802	640	322	814	772	1303	569	1297	464	747
LA-28	979	1080	1550	560	460	125	490	1282	1450	1259	1465	1354	61	74	101	481	561	861	673	367	909	831	1424	624	1510	773	735
LA-35C	1095	1184	1767	640	560	158	712	1500	1668	1501	1683	1587	61	74	101	596	676	976	808	384	1037	946	1637	740	1723	795	732
LA-45C	1095	1304	1767	640	560	158	712	1500	1668	1331	1513	1587	61	74	101	596	676	976	808	384	1037	946	1637	740	1723	795	800

Typical arrangement shown; letter positions are the same on LA-11 to LA-45C (LA models stand on levelling feet). Drain is Ø76 mm (3"). CGY / CGZ locate the centre of gravity.

SPENCER Systems | FAGOR

Fagor LA washer extractors

MAIN DIMENSIONS · ALL DIMENSIONS IN MILLIMETRES

GENERAL ARRANGEMENT · LA-60C / LA-80C

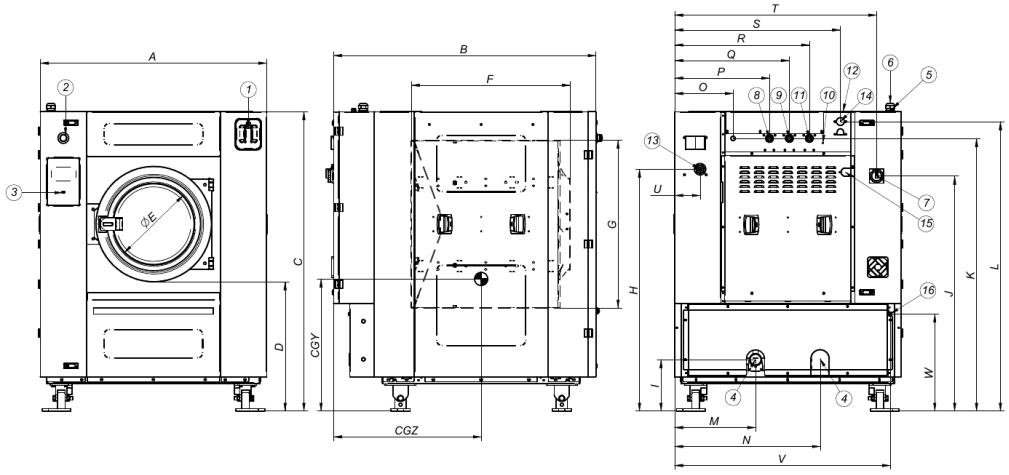

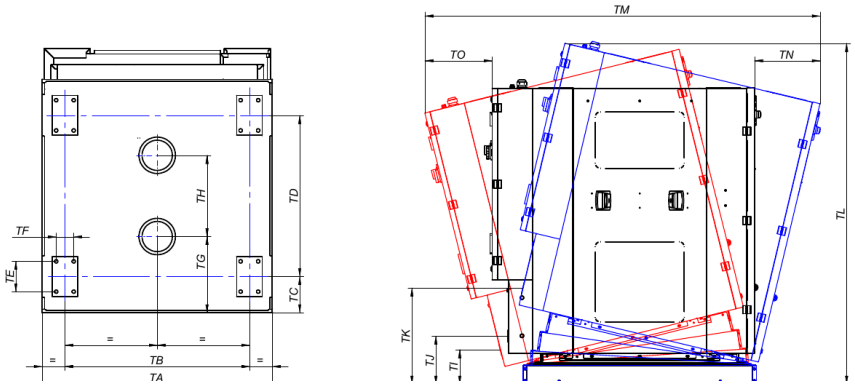

CONNECTIONS

1. Soap dispenser
2. Emergency stop
3. USB port
4. Drain 1
5. Drain 2
6. Electrical connection, liquid soap pumps
7. Electrical connection
8. Main switch
9. Auxiliary water inlet
10. Hot water inlet
11. Equipotential connection
12. Cold water inlet
13. Steam output
14. Liquid soap connection
15. Steam connection
16. Air intake
17. Ethernet port

Model	A	B	C	D	E	F	G	H	I	J	K	L	M	N	O	P	Q	R	S	T	U	V	W	X	Y	CGY	CGZ
LA-60C	1420	1433	1890	810	560	760	1050	1563	323	1475	1710	1817	508	912	367	595	720	845	1040	1267	160	1353	608	1500	348	830	820
LA-80C	1420	1645	1890	810	560	972	1050	1563	323	1475	1710	1817	508	912	367	595	720	845	1040	1267	160	1353	608	1500	348	830	925

Model	TA	TB	TC	TD	TE	TF	TG	TH	TI	TJ	TK	TL	TM	TN	TO
LA-60C	1145	1157	226	799	190	110	265	722	215	300	565	2095	2266	410	422
LA-80C	1145	1157	226	1011	190	110	475	510	215	300	602	2137	2478	410	422

Second table: TA–TO give the foundation and tilting clearances (bottom views). CGY / CGZ locate the centre of gravity.

SPENCER Systems | FAGOR

Fagor LA washer extractors

MAIN DIMENSIONS · ALL DIMENSIONS IN MILLIMETRES

GENERAL ARRANGEMENT · LA-100C / LA-120C

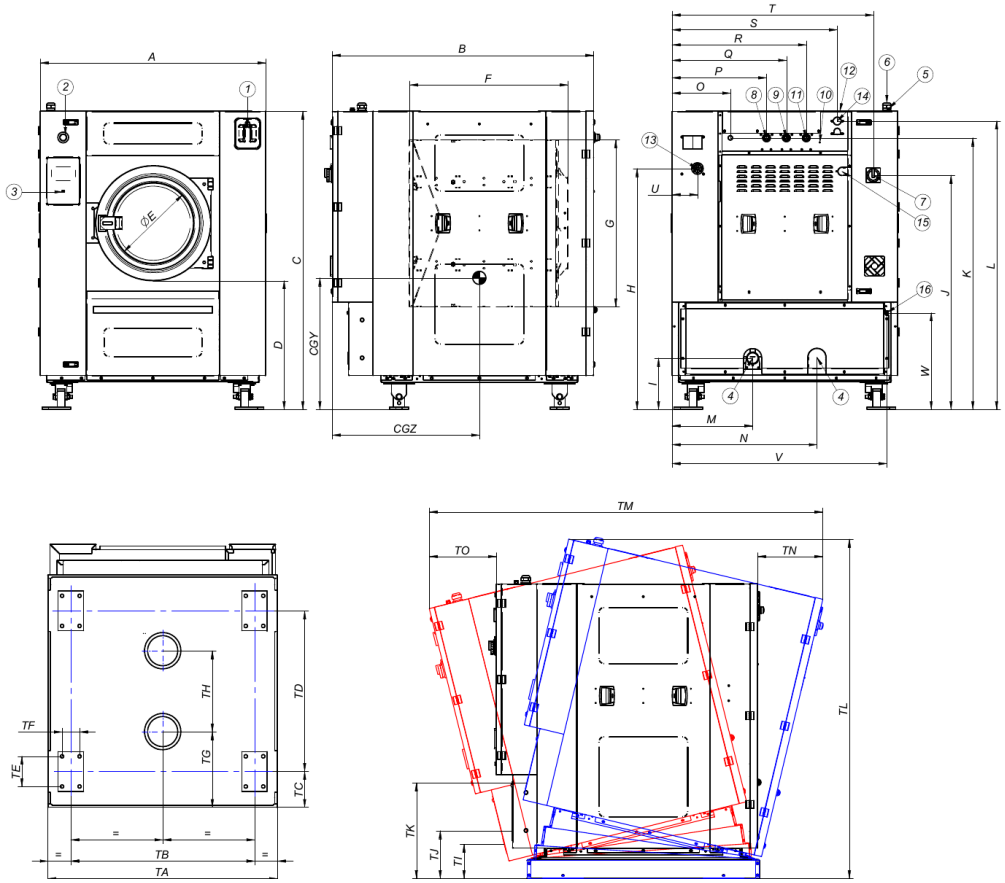

CONNECTIONS

1. Soap dispenser
2. Emergency stop
3. USB port
4. Drain 1
5. Drain 2
6. Electrical connection, liquid soap pumps
7. Electrical connection
8. Main switch
9. Auxiliary water inlet
10. Hot water inlet
11. Equipotential connection
12. Cold water inlet
13. Steam output
14. Liquid soap connection
15. Steam connection
16. Air intake
17. Ethernet port

Model	A	B	C	D	E	F	G	H	I	J	K	L	M	N	O	P	Q	R	S	T	U	V	W	Y	Z	CGY	CGZ
LA-100C	1836	1710	2245	945	700	792	1350	1740	336	1781	2038	2110	1095	1092	494	634	774	954	994	1239	1646	165	2049	2050	717	853	1025
LA-120C	1836	1832	2245	945	700	930	1350	1740	336	1781	2038	2110	1095	1092	494	634	774	954	994	1239	1646	165	2049	2050	717	853	1130

Model	TA	TB	TC	TD	TE	TF	TG	TH	TI	TJ	TK	TL	TM	TN	TO
LA-100C	1765	1615	200	1161	190	110	375	806	210	330	667	2504	2636	496	491
LA-120C	1765	1615	200	1344	190	110	375	990	254	330	662	2465	2672	419	423

Second table: TA–TO give the foundation and tilting clearances (bottom views). CGY / CGZ locate the centre of gravity.